C.F.R. srl Modena - Italy	DC MOTOR IN WHEEL UNIT	CODE MRT05.0077	Rev.: Date:

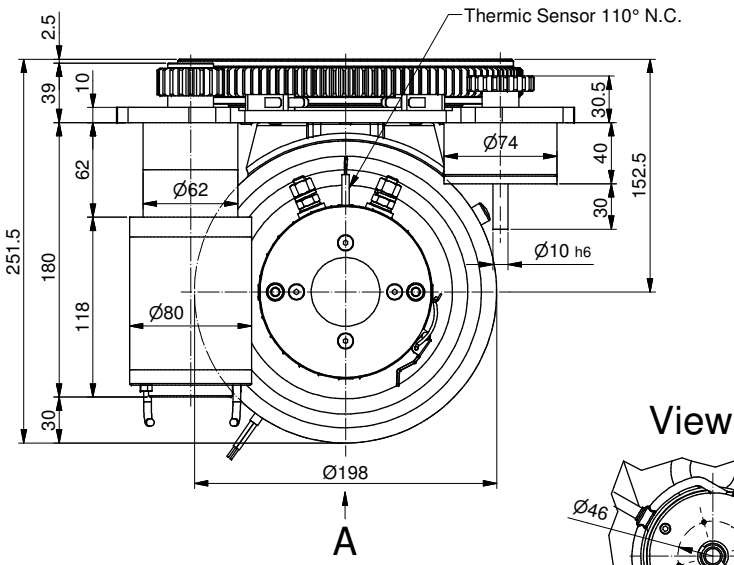

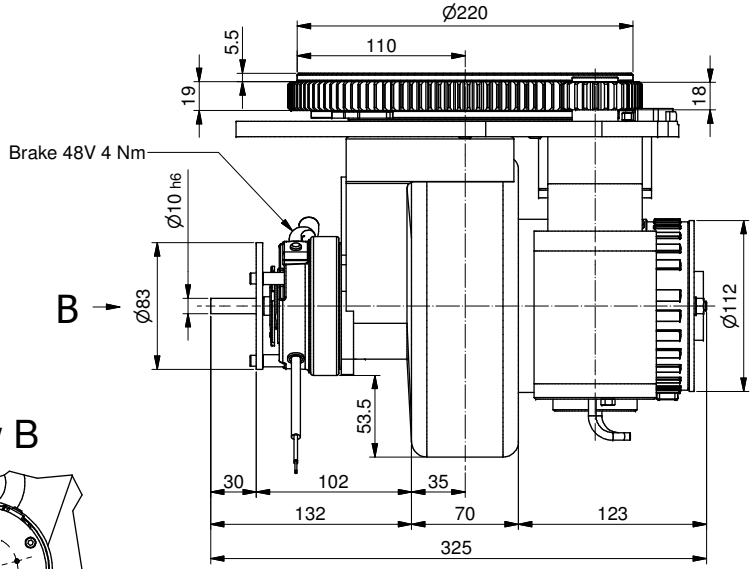

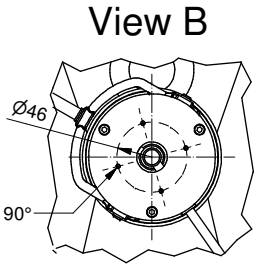

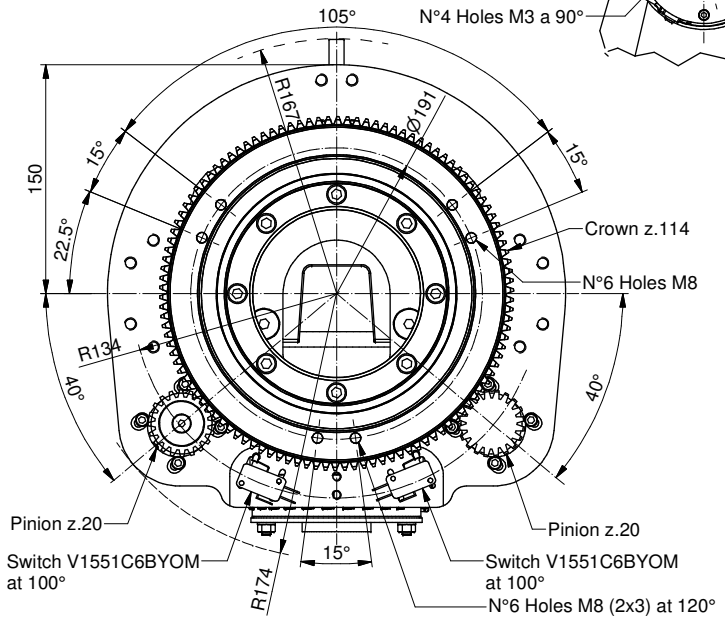

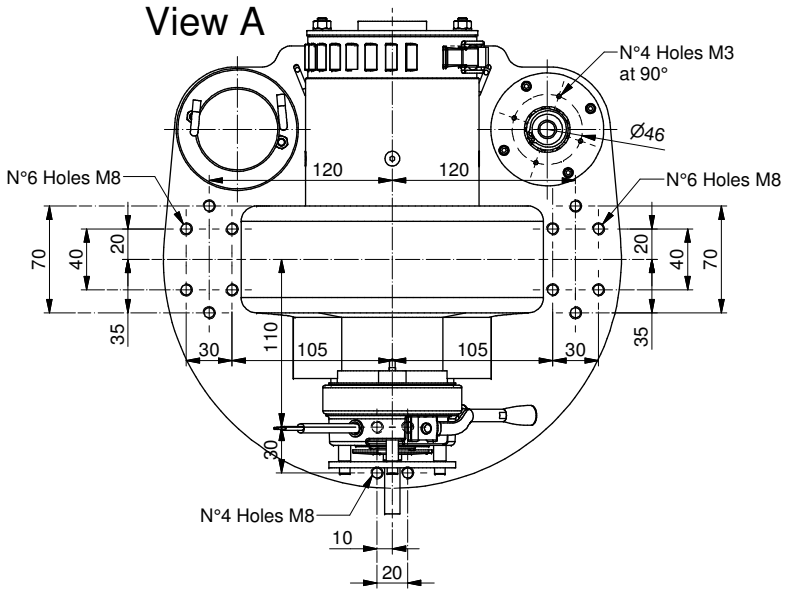

Traction motor data		
Type : Permanent Magnet Motor		
Power (S2 - 60 min)	W	400
Battery voltage	V	48
Speed	Rpm	2800
Current	A	13
Torque	Nm	1.4
Enclosure	IP	20

Traction gear data		
Gear ratio	i	1:30.88
Max accel. and braking torque	Nm	180
Nominal wheel torque	Nm	32.5
Max load on vulkollan wheel	Kg	600
Max load on poliurethan wheel	Kg	550
Max load on solid rubber wheel	Kg	400
Brake torque	Nm	4
Lubrication		Grease

Steering gearmotor data		
Type : Permanent Magnet Motor		
Power (S2 - 60 min)	W	100
Battery voltage	V	48
Motor Speed	Rpm	3000
Current	A	3
Motor torque	Nm	0.3
Gear ratio	i	1:45.56
Gear Output Torque	Nm	10.3
Enclosure	IP	20
Lubrication		Grease

Total Weight	Kg	42

Data : *Date :* 05/12/2018	Scala : *Scale :* 1 : 3.5	A3
Dis : *Drawn :* R.P.		