C.F.R. srl Modena - Italy	DC MOTOR IN WHEEL UNIT	CODE MRT10.0077

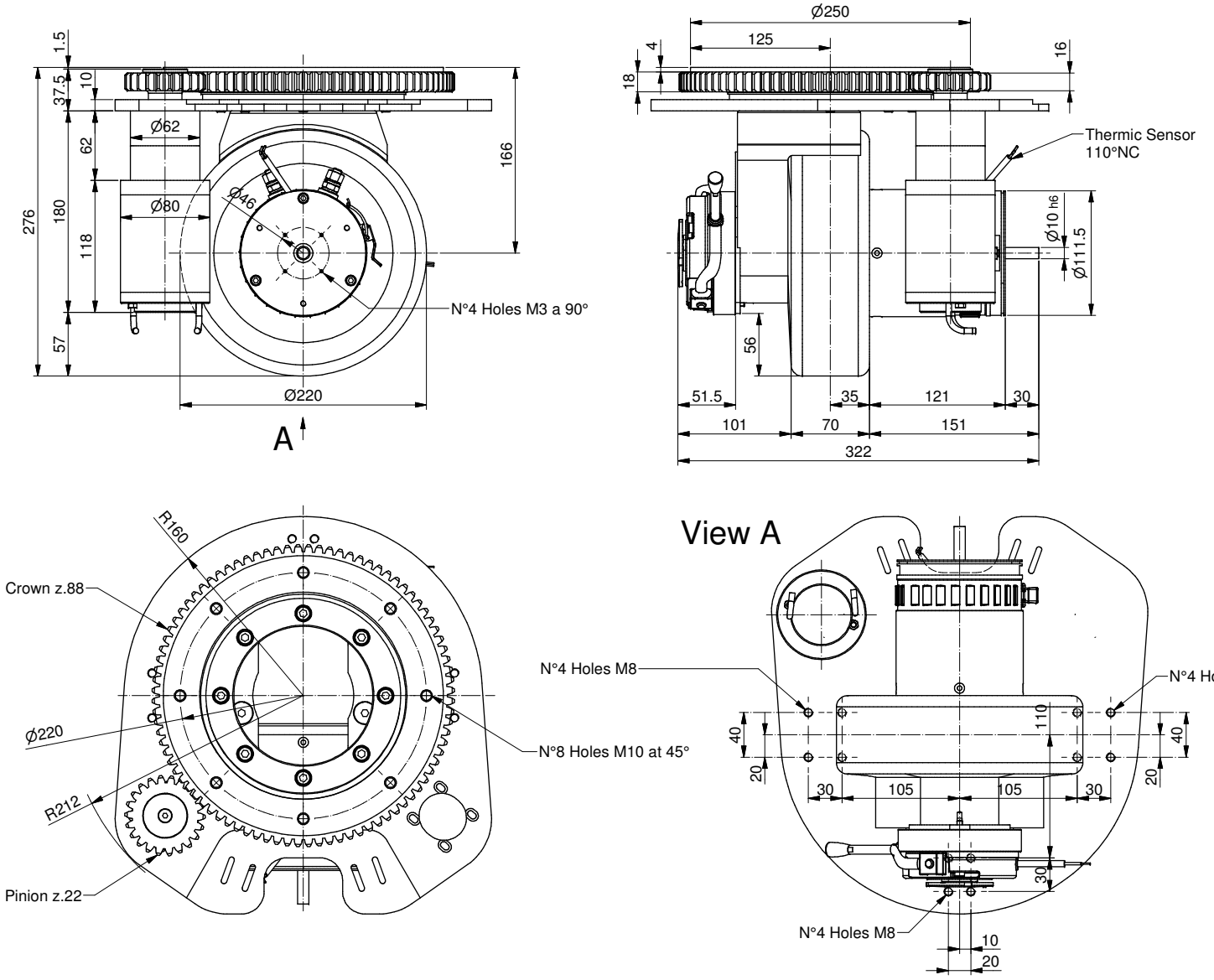

Traction motor data		
Type : Permanent Magnet Motor		
Power (S2 - 60 min)	W	600
Battery voltage	V	24
Speed	Rpm	2800
Current	A	34
Torque	Nm	2
Enclosure	IP	20

Traction gear data		
Gear ratio	i	1:32.6
Max accel. and braking torque	Nm	230
Nominal wheel torque	Nm	52
Max load on vulkollan wheel	Kg	
Max load on poliurethan wheel	Kg	600
Max load on solid rubber wheel	Kg	420
Brake torque	Nm	8
Lubrication		Grease

Steering gearmotor data		
Type : Permanent Magnet Motor		
Power (S2 - 60 min)	W	100
Battery voltage	V	24
Motor Speed	Rpm	3000
Current	A	8
Motor torque	Nm	0.32
Gear ratio	i	1:45.56
Gear Output Torque	Nm	11
Enclosure	IP	20
Lubrication		Grease

Total Weight	Kg	48

Data : *Date :* 29/05/2017	Scala : *Scale :* 1:4	A3
Dis : *Drawn :* R.P.		