C.F.R. srl
Modena - Italy

DC MOTOR IN WHEEL UNIT

CODE
MRT27.0030

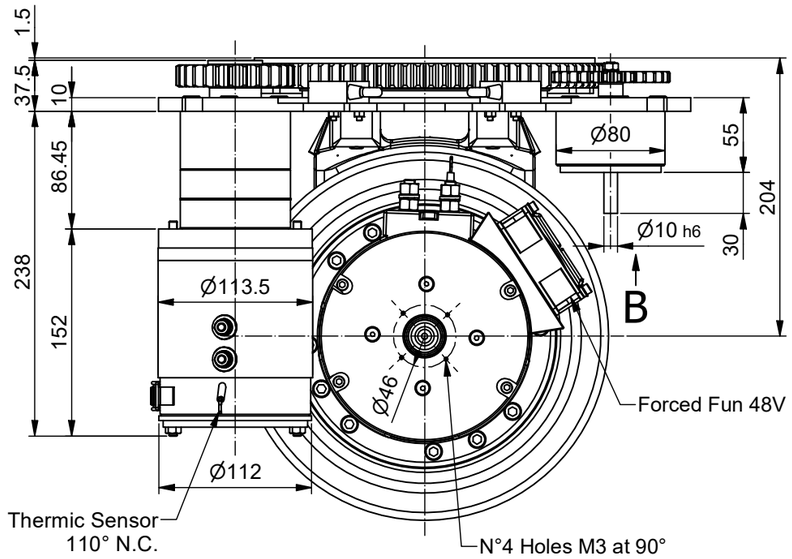

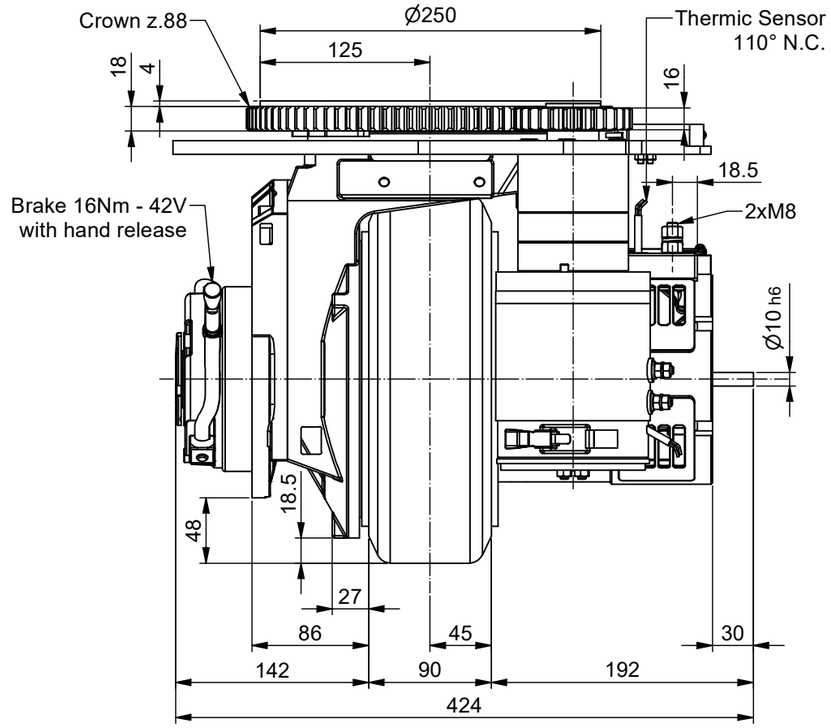

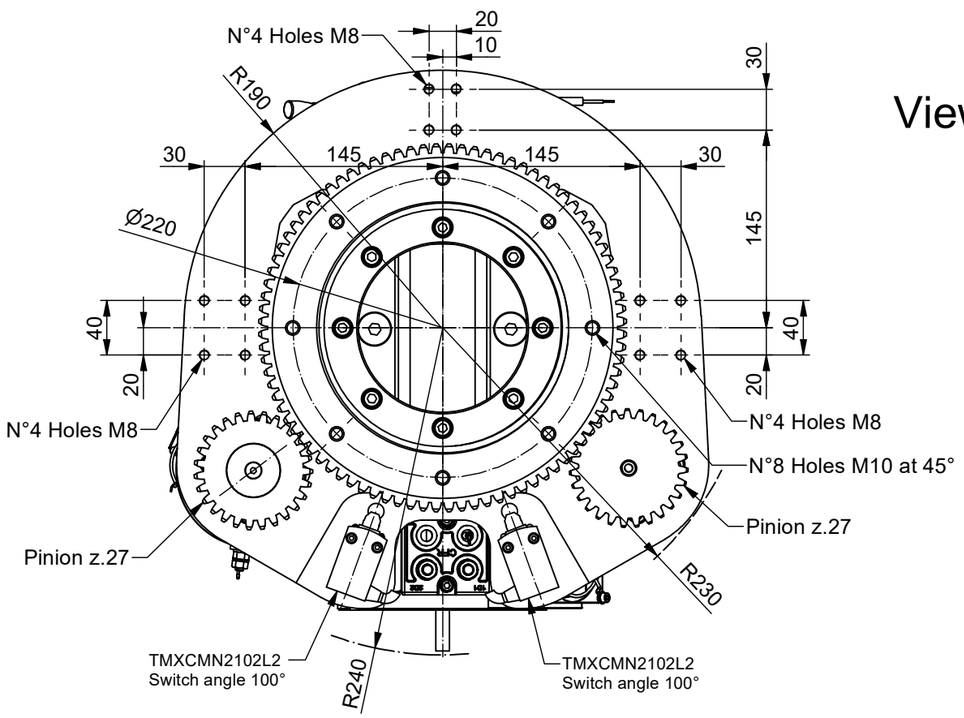

View B

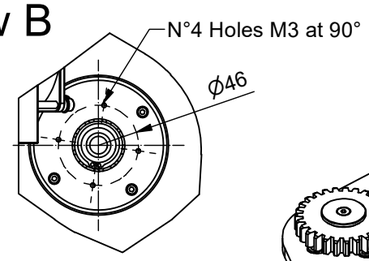

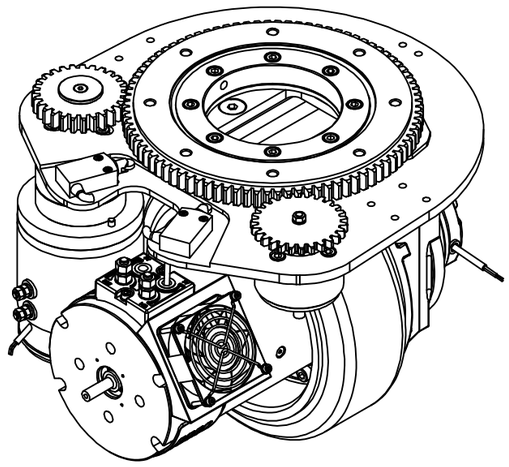

Traction motor data		
Type : Permanent Magnet Motor		
Curve	M01346	
Power	W	1800
Battery voltage	V	48
Speed	Rpm	1700
Current	A	45.3
Torque	Nm	10.1
Enclosure	IP	20

Traction gear data		
Gear ratio	i	1:28,2
Max accel. and braking torque	Nm	500
Nominal wheel torque	Nm	228
Max load on vulkollan wheel	Kg	1300
Max load on poliurethan wheel	Kg	
Max load on solid rubber wheel	Kg	
Brake torque	Nm	16
Lubrication		Grease

Steering gearmotor data		
Type : Permanent Magnet Motor		
Curve		
Power	W	400
Battery voltage	V	48
Motor Speed	Rpm	3000
Current	A	10
Motor torque	Nm	1.3
Gear ratio	i	1:45.56
Gear Output Torque	Nm	43.5
Enclosure	IP	20
Lubrication		Grease

Total Weight	Kg	56

Rev.	Description	Date	Signature
C			
B			
A			

Data : *Date :*	20/01/2021	Scala : *Scale :*	1 : 4.5
Dis : *Drawn :*	A.A.		**A3**